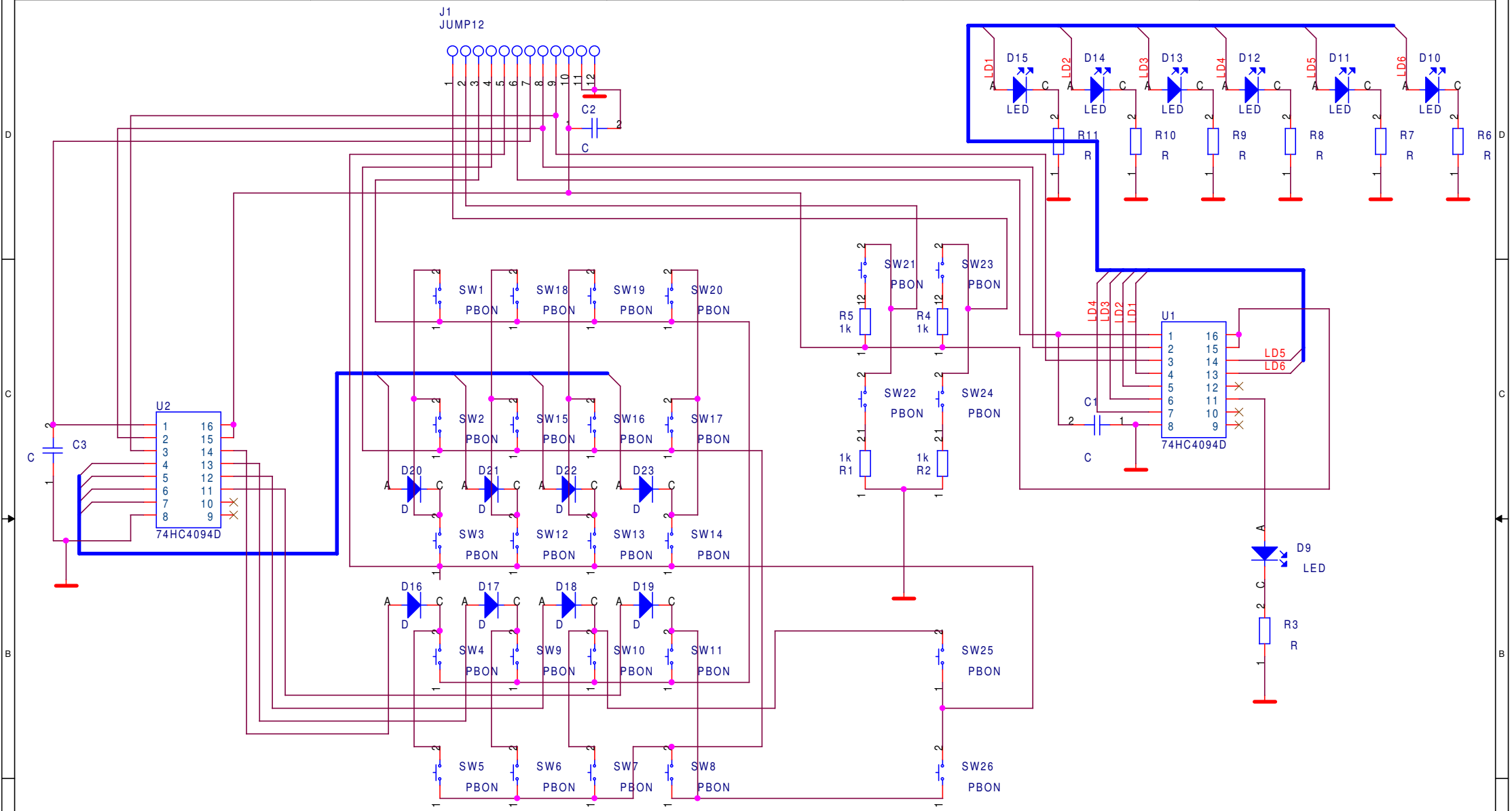

Title <Title>		
Size A4	Document Number <Doc>	Rev <RevCode>
Date: Friday, May 14, 2004	Sheet 1 of 1	