STOPWATCH01B

Hitory

1.0 First Version derived from STOPWATCH01A

Firma MLAB			Author MIHO
Size A4	Project Name MLAB	Schematic Name STOPWATCH01B	Rev 1.0
Date: Friday, March 26, 2004		Sheet 1 of 3	

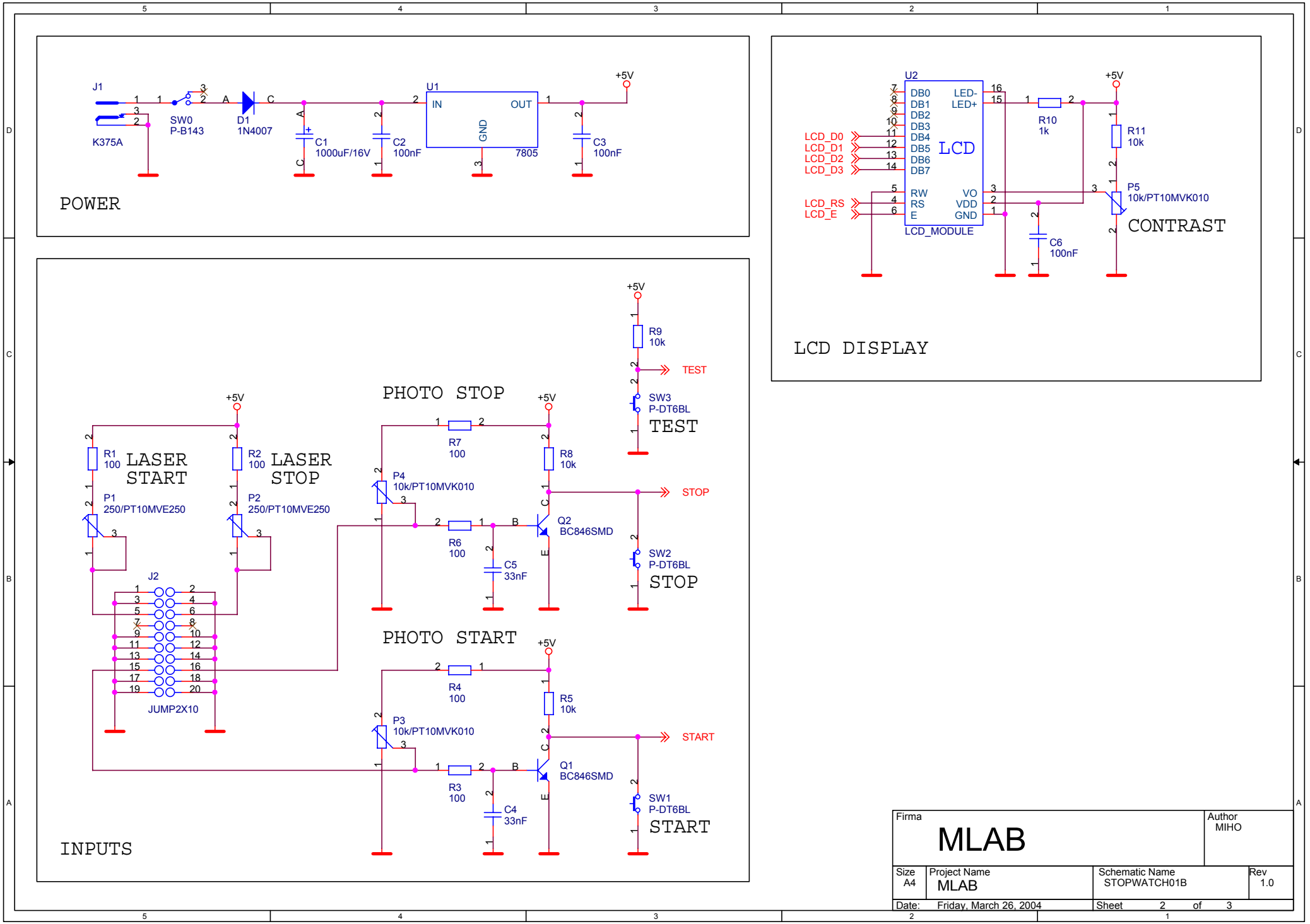
POWER
J1
K375A
SW0
P-B143
D1
1N4007
C1
1000uF/16V
C2
100nF
U1
IN
OUT
GND
7805
C3
100nF
+5V
LCD DISPLAY
U2
DB0
DB1
DB2
DB3
DB4
DB5
DB6
DB7
RW
RS
E
LED-
LED+
VO
VDD
GND
LCD
LCD_MODULE
LCD_D0
LCD_D1
LCD_D2
LCD_D3
LCD_RS
LCD_E
R10
1k
R11
10k
P5
10k/PT10MVK010
CONTRAST
C6
100nF
INPUTS
LASER START
R1
100
P1
250/PT10MVE250
LASER STOP
R2
100
P2
250/PT10MVE250
J2
JUMP2X10
PHOTO STOP
R7
100
R8
10k
P4
10k/PT10MVK010
R6
100
C5
33nF
Q2
BC846SMD
R9
10k
TEST
SW3
P-DT6BL
TEST
STOP
SW2
P-DT6BL
STOP
PHOTO START
R4
100
R5
10k
P3
10k/PT10MVK010
R3
100
C4
33nF
Q1
BC846SMD
START
SW1
P-DT6BL
START
Firma
MLAB
Author
MIHO
Size
A4
Project Name
MLAB
Schematic Name
STOPWATCH01B
Rev
1.0
Date:
Friday, March 26, 2004
Sheet
2
of
3

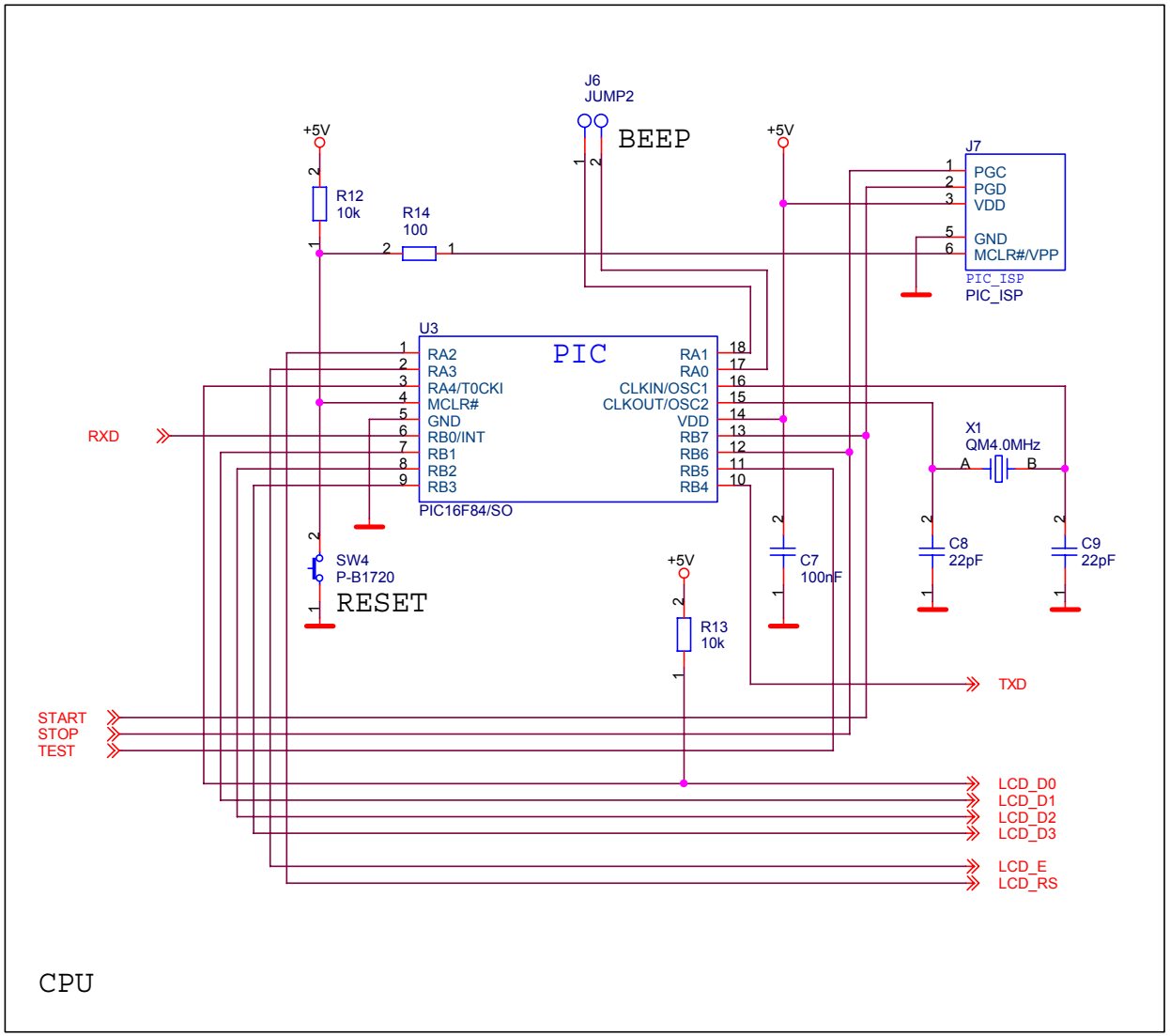

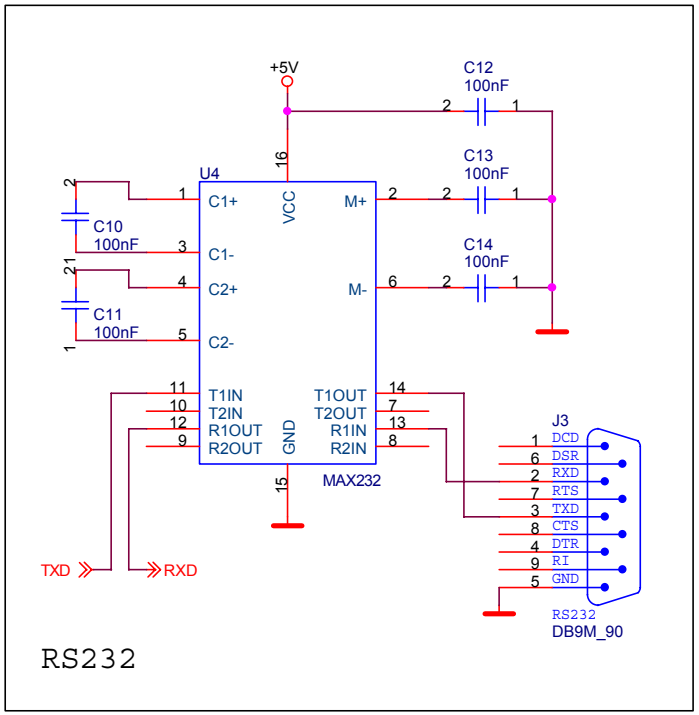

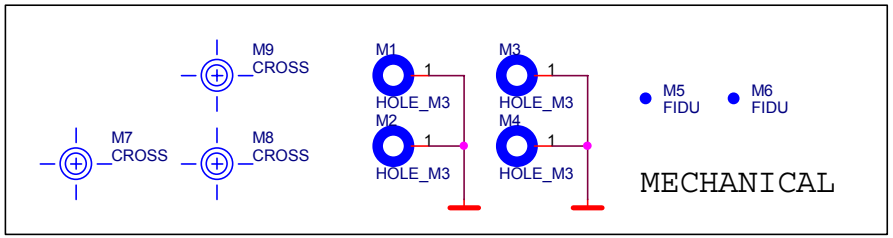

Firma			Author
MLAB			MIHO
Size A4	Project Name MLAB	Schematic Name STOPWATCH01B	Rev 1.0
Date: Friday, March 26, 2004		Sheet 3 of 3	