HAMA

MODEL NO. TA03C

INPUT: 100-240Vac 50-60Hz 200mA

OUTPUT: 10Vdc 350mA Max 3.5W

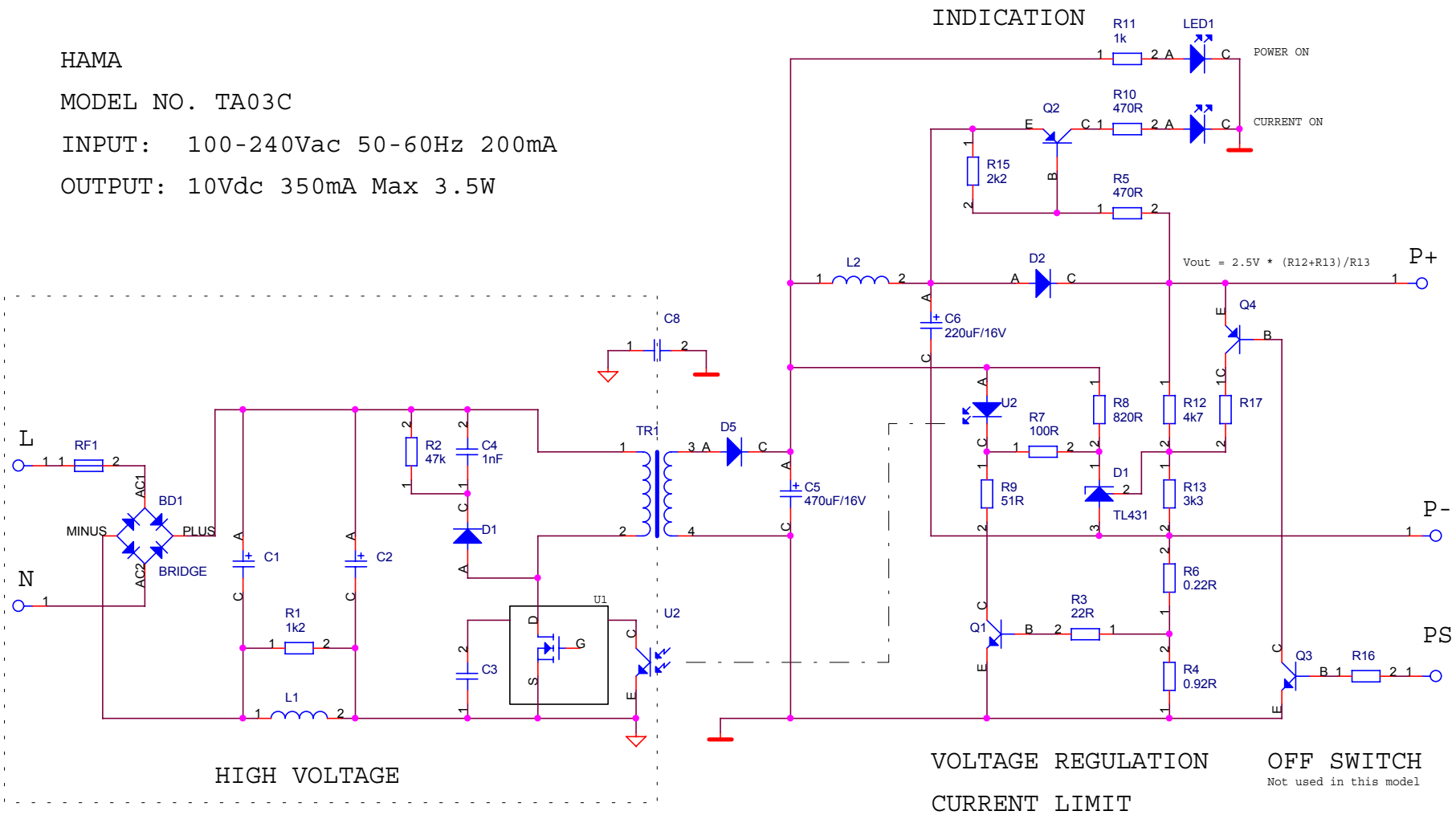

Firma			Author
MLAB			MIHO
Size A4	Project Name POWER SUPPLY	Schematic Name CITIPACK TA-03B	Rev 0.0
Date: Saturday, April 30, 2005		Sheet 1 of 1	